Kaplieva Kseniia

INTEGRATED SMART HOME ENGINEERING SYSTEMS

Innovative Technologies for Energy Supply, Backup Energy Storage, Water Supply, Treatment, Recovery, and Recirculation

2026

Arrow Science & Technology

DOI: 10.29013/ISHES.KaplievaK.40.2026

Kaplieva Kseniia
Integrated Smart Home Engineering Systems / K. Kaplieva, – Urbana : Arrow Science & Technology, LLC – 2026. – 40 p.

ISBN 978-1-967596-52-2

The book explores advanced technological solutions that form the infrastructure of modern smart homes. Particular attention is given to energy supply and reserve energy storage, water distribution and purification, water recovery and recirculation, as well as systems for supplying clean air, regenerating indoor air, and enriching it with oxygen. The book also considers integrated monitoring and real-time active control of these systems, including coordination and interaction between individual infrastructure components.

Each infrastructure element and the relationships among the various systems are examined in detail from both technical and software perspectives. The proposed solutions reflect advanced international approaches to technological development and design innovation. They also provide a technological foundation for incorporating artificial intelligence and artificial neural networks into the design, management, and operation of smart homes.

Practical experience indicates that effective water management is one of the essential conditions for the successful implementation of smart home concepts. In particular, water preparation and purification, together with recovery, recirculation, and reuse, play an important role in ensuring the efficient construction and operation of an integrated smart home system.

The book is organized into several independent sections. Each section introduces an original development addressing a specific aspect of contemporary science, engineering, or technology that may be applied to the development and improvement of smart home systems.

Keywords: *Smart Home Infrastructure; Energy Supply; Backup Energy Storage; Water Treatment; Water Recovery; Water Recirculation; Clean Air Supply; Oxygen Enrichment; Artificial Intelligence; Artificial Neural Networks*

Subscribe to print 09/25/2026. Format 60×84/16.
Offset Paper. Arno Pro. Pec. liter. 14. Circulation of 300 copies.
Typeset in Arrow Science & Technology, LLC, USA.

Publishing by Arrow Science & Technology, LLC
805 Silver St., Urbana, IL 61801

ISBN 978-1-967596-52-2

© Kaplieva Kseniia, 2026.
© Arrow Science & Technology, LLC, Urbana, 2026.

Contents

Introduction to the Innovation Logistics of a Smart Home and Its Infrastructure Components 4

Development of a Patent and Licensing Strategy Flowchart 8

Smart Home Infrastructure 10

Status of Projects Related to the Security Coding of Electronic Devices, Optical Discs, and Digital External Storage Media Used in Smart Home Infrastructure Systems and Subsystems 20

Additional Technological Features 21

Confidentiality of Information 24

Brief Description of the Resonance Method 30

Principle of Processing Data Obtained from Resonance Sensors 31

Interference Immunity 34

References, Patent and Licensing Information 37

Introduction to the Innovation Logistics of a Smart Home and Its Infrastructure Components

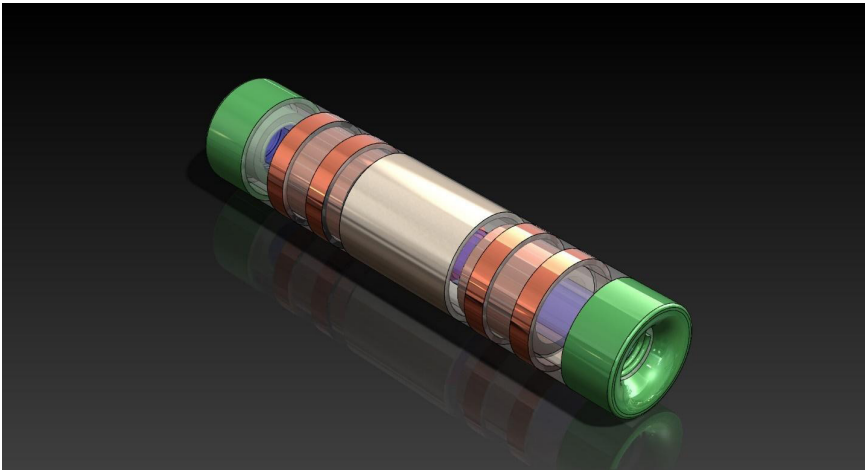

The process of developing a technical solution that constitutes an invention while also possessing commercial potential requires extensive analytical preparation, numerous comparative evaluations, and the identification of parameters and aspects capable of attracting investors and generating the required level of consumer demand under current market conditions.

The era of isolated inventions that could be implemented autonomously and independently of the broader technological environment and the integrated conditions of modern life has passed. Contemporary development must also take into account environmental, ecological, and social aspects of implementation and use.

Without a systematic approach and a clearly defined methodology, it is particularly difficult for the authors and developers of technical solutions and technologies to navigate this complex environment.

First, the proposed technological solution must be evaluated, and its parameters must be systematically compared with previously developed technical solutions and technologies that have achieved, or continue to achieve, commercial success.

Market requirements are often highly subjective. It is therefore necessary to establish a connection between subjective market factors and objective conditions, including the ultimate capabilities of the technological equipment, the availability of suitable materials, their cost, and the practical feasibility of the required processing and finishing operations. At the same time, these limitations must not be allowed to undermine the positive features, competitive advantages, and distinctive characteristics of the prospective invention.

A preliminary analysis should be conducted according to the following framework:

1. Introduction

2. Assessment of the Integrated Nature of the Proposed Technology

The assessment should include:

- an analysis of whether the proposed technology uses only established and repeatedly verified physical principles and laws embodied in a compact and integrated engineering or technological solution;
- an analysis of whether the proposed technology and the device or method intended for its implementation can be introduced into actual industrial systems without any modification to their design or operating principles;
- an analysis of whether the proposed technology uses only established and widely available components and combinations thereof;

- an analysis of whether the proposed technology enables the integrated use of both widely known and new components in various combinations with established components, with such combinations resulting from the properties and characteristics of the device used to implement the proposed technology;
- an analysis of the degree of versatility and flexibility of the proposed technology, including its capacity to support flexible technological configurations within the same device or method used for its implementation;
- an analysis of whether the proposed technology incorporates, or is capable of incorporating, a system for monitoring, controlling, and regulating its parameters. Such a system should be based on the minimum necessary number of monitored and controlled process parameters that directly affect the efficiency of both the process and the device during operation, taking into account the required technological, energy-related, and environmental outcomes.

3. Description of the Process

4. Possible Components of the Proposed Technology and Device

5. Description of Possible Device Configurations

This section should describe alternative device configurations, taking into account the possibility of integrated activation and improvement of the efficiency of the device's fundamental operating principles.

6. Description of the Process Advantages Resulting from the Properties and Characteristics of the Proposed Device

7. Description of Established and Proven Preceding Technologies

This section should describe the established and tested technologies that preceded the proposed technology and explain how they positively influenced its development, output parameters, and operating characteristics.

8. Characteristics of the Proposed Technology

9. Sequential Description of the Technological Stages of the Proposed Process

10. Schematic Diagram of the Devices and Components

This section should contain a schematic diagram of the devices and components incorporated into the industrial system that uses the proposed integrated technology.

11. Operating Procedure for the Proposed Device

The operating procedure should be described using an example of the device's implementation within an actual industrial system.

12. Operating Characteristics of the Proposed Technology During the Initial Stages of Its Application

13. Operating Characteristics of the Proposed Technology During the Subsequent Stages of Its Application

14. Methods for Regulating the Principal Operating Characteristics of the Proposed Technology

This section should address the possibility of remotely controlling the regulation process, identify the principal adjustable parameters, and describe the feedback mechanisms used during regulation.

15. Principal Operating Parameters of the Proposed Technology

This section should identify the parameters that determine the advantages of the proposed technology over existing solutions and technological alternatives.

16. Description of the Proposed Process and the Integrated Nature of the Proposed Technology

This section should describe the proposed process and explain the advantages arising from the implementation of the proposed process or technology, including its comprehensive and integrative characteristics.

17. Projected and Calculated Characteristics of the Proposed Process

18. Technical and Commercial Advantages of the Proposed Technology

This section should describe the technical and commercial advantages associated with the application of the proposed technology, its potentially integrated nature, and the influence of this factor on its implementation and performance.

Development of a Patent and Licensing Strategy Flowchart

Once the above analysis has been completed, a sufficient amount of information may be available to prepare and complete the patent and licensing strategy flowcharts.

The structure of such flowcharts may vary substantially depending on the complexity of the technical solution. Nevertheless, the flowcharts will be more effective and reliable if, before they are completed, a forecast is prepared concerning the development of the relevant field of technology to which the proposed technical solution or prospective invention relates.

A wide range of information and analytical tools is currently available for preparing such forecasts. The analysis of the information obtained through these tools, combined with a clear understanding of the technical and commercial substance of the technology being developed, makes it possible to prepare a sufficiently accurate forecast.

The initial sections of the flowchart may then be completed using the proposed model, after which the planned activities may proceed to implementation.

Full compliance with all preliminary requirements governing the operational quality of smart home infrastructure components makes it possible to proceed to Part Two of the book. This part addresses one of the most pressing issues in smart home infrastructure: ensuring a consistently high level of water quality without the use of chemicals or chemical reagents.

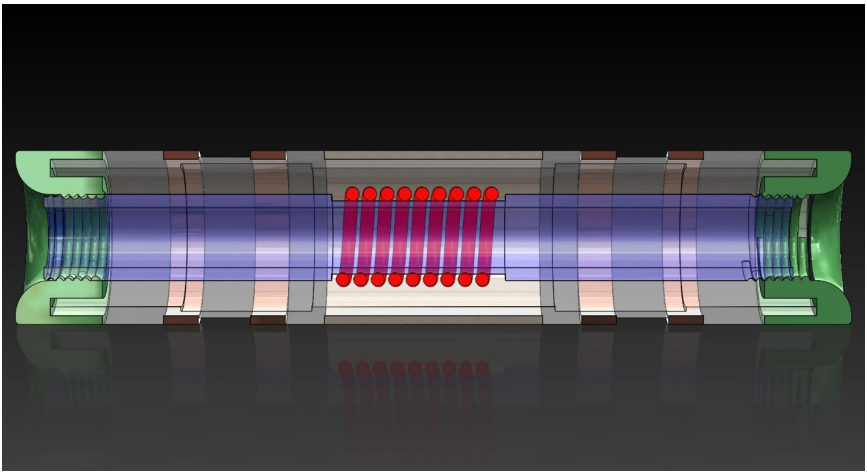

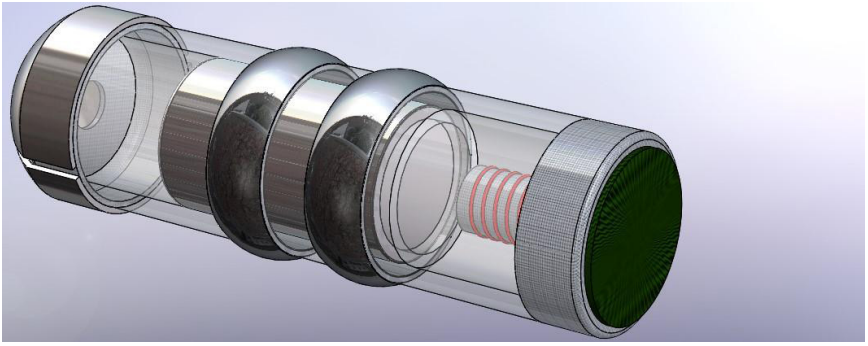

The figures present three-dimensional models of sensor modules designed for various types of online, non-contact, real-time measurement and monitoring of water consumption and water quality within smart home infrastructure components. These modules may also be used in functionally equivalent systems incorporated into the infrastructure of smart home counterparts.

Smart Home Infrastructure

The subsequent sections of the book examine innovative smart home infrastructure components designed to address the full range of tasks associated with the autonomous management and monitoring of smart home infrastructure supersystems and subsystems. Particular attention is given to the interconnection of these systems and their integration with equivalent systems serving other smart homes within the same residential area.

Priority is given to cybersecurity and to the implementation of highly integrated, multifunctional mobile applications within smart home infrastructure systems.

Proposal for a System for Obtaining Professional Information from the Internet

The primary component of the proposed system is an optical disc featuring a coded coating applied within an annular area that contains no recorded data.

An auxiliary component is a microsensor integrated into the optical disc drive.

The microsensor generates a signal by measuring the thickness of the coded coating. The measurement accuracy is 100 angstroms (100 Å), which corresponds to the difference in coating thickness between individual groups of discs.

The signal generated by the microsensor serves as an access code for information repositories hosted on the Internet.

The software must be capable of identifying the signal received from the microsensor. If the signal matches the reference signal, the software grants access to the relevant information repositories. Throughout the downloading process, it must continuously verify the authenticity and integrity of the signal until the information transfer has been completed.

This continuous verification prevents the authorized disc from being replaced with an unlicensed disc while data are being downloaded or recorded.

Counterfeiting such a disc would be extremely difficult because the thickness of its coded coating is established during manufacturing. Moreover, possession of the disc alone would not provide access without a microsensor configured to recognize the precisely defined characteristics of the corresponding signal.

The discs and microsensors could be manufactured at any existing optical-disc production facility. The discs could be produced in batches of 100–250 units with an identical coded-layer thickness and supplied together with a corresponding set of microsensors.

Each user could purchase one or more batches of discs and use them when accessing information via the Internet.

The same operating principle could be used to distribute software and other information to users through a reverse authentication and data-transfer procedure. This approach would help ensure confidentiality and protect users against unauthorized messages, malicious content, and computer viruses while connected to the Internet.

The information presented above provides only a general description of the concept. If the proposal is considered worthy of further investigation, a group of independent inventors could develop and elaborate the project in greater technical detail.

Since the mechanical component of the proposed system has, in principle, already been implemented, the principal focus of the project is its software. This software could serve as the foundation for a broader project in this field.

Effective monitoring and control systems have also been developed on the basis of, and as integral components of, mobile applications.

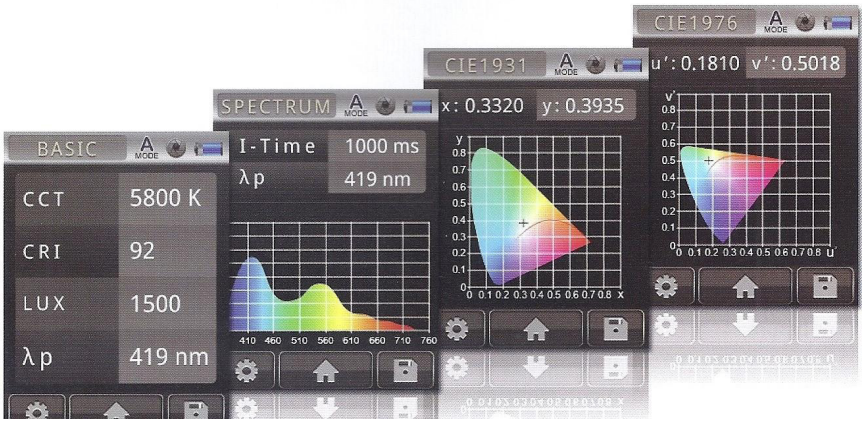

Hard Magnetic Disk for Data Storage Devices and Personal Computers Used in Smart Home Systems, Featuring a Beryllium-Based Alloy Substrate and an Electroplated Un-

derlayer Beneath the Ferromagnetic Layer, Produced Using Accelerated Jet Electrochemical Processing

1. Production Engineering and Technology for Beryllium-Based Alloys

Metallurgical aspects of the production engineering and technology; manufacturing equipment; specialized raw materials; proprietary processes; patent and licensing status; feasibility of independent application, production and commercialization; potential forms of commercial implementation; availability of finished prototypes; availability of test reports; compliance with applicable standards; identification of the parameters having the greatest influence on overall efficiency and their classification in accordance with technical documentation and relevant standards.

2. Engineering and Technology for Waste-Free Cutting of Beryllium-Based Alloy Rods to Produce Hard Magnetic Disk Substrate Blanks

Specialized manufacturing equipment, tooling and fixtures; specialized cutting tools; suitability of the tools and equipment for cutting other materials similar to beryllium-based alloys; patent and licensing status; compliance with applicable standards; identification of non-standard parameters that positively affect process efficiency; availability of test reports; availability of presentation samples; feasibility of independent production and commercialization; specific requirements associated with manufacturing, application, storage and adaptation to existing cutting equipment; cost of the individual manufacturing process components; and the cost of products with distinctive technical characteristics intended for commercialization as proprietary products.

3. Engineering and Technology for the High-Efficiency Grinding and Polishing of Hard Magnetic Disk Substrate Blanks for Data Storage Devices

Specialized manufacturing equipment, process tooling and instruments; process workflow; process operation sheets; availability of presentation samples; compliance with applicable standards; economic indicators and pricing; manufacturing and commercialization options, including independent production and commercialization; and patent and licensing status.

4. Finished Hard Magnetic Disk Substrate Blank as a Commercial Product and as a Workpiece for Subsequent Finishing Operations

Product description; technical specifications; cost; availability of presentation samples; compliance with applicable standards; storage conditions; specialized shipping containers and packaging samples; special delivery requirements; testing methods and programs; and the results of completed tests and evaluations.

The figure presents examples of disposable laser instruments, each equipped with a coding system based on the principles of electromagnetic resonance spectroscopy.

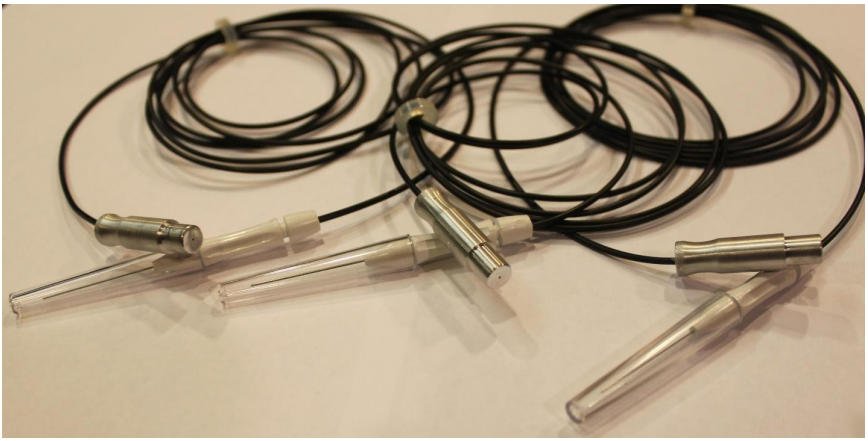

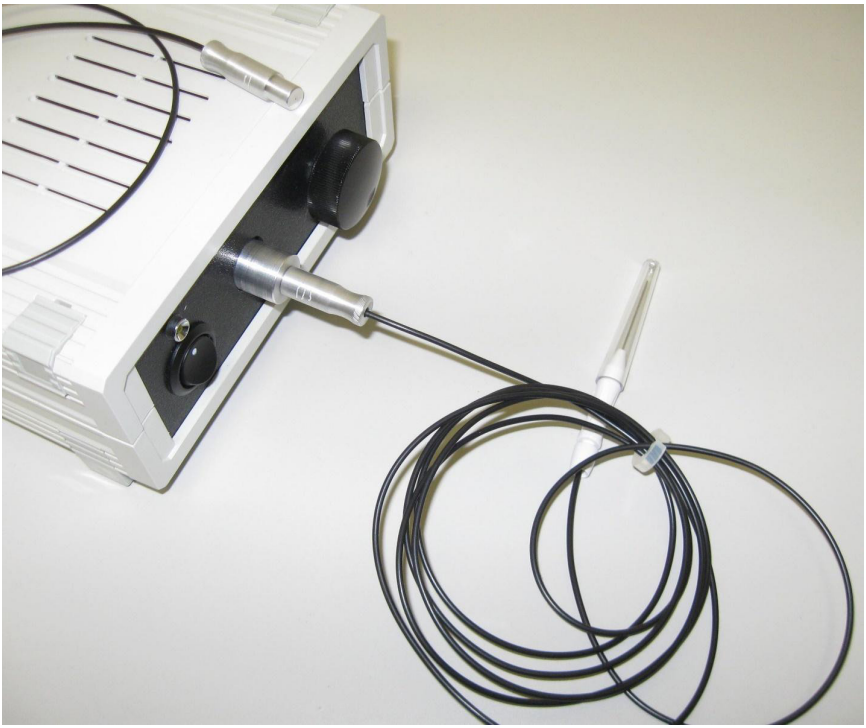

Under the current configuration of specialized equipment used within smart home systems, the application of technologies based on electromagnetic resonance spectroscopy and magnetic resonance appears to be the most appropriate approach for coding operational tools and smart home infrastructure components, as well as for the active quality control of next-generation disks.

These methods may be combined with advanced technologies such as size-selective metal etching. This combination enables a comparative assessment of the quality and performance of optical and magnetoresistive methods and may contribute to the development of new integrated technologies.

Such technologies could serve as a foundation for the manufacture and commercial implementation of next-generation data storage devices intended for smart home systems and their

functional equivalents, particularly in view of the introduction and widespread use of quantum computers and comparable advanced computing systems.

Furthermore, the need for smart home systems to operate with artificial intelligence and artificial neural network components can be fully addressed through the implementation of the innovative technologies described above.

The proposed technology is based on the principles of magnetic resonance, electromagnetic resonance, and electromagnetic resonance spectroscopy. These principles are implemented in sensors and related infrastructure developed in accordance with the conceptual models presented by the author of this book in collaboration with a group of independent inventors.

The technology also incorporates a nanocomposite material composed of spherical nanocapsules. Each nanocapsule may consist either of an amorphous iron core coated with a shell of rare-earth metals or of an amorphous iron core sequentially coated with cobalt and aluminum shells. The nanocapsules are used as magnetic tags.

When the disk is manufactured as a monolithic assembly formed by bonding two layers, the magnetic-tag material is introduced at a predetermined location between the layers during the bonding process. The presence of this material is subsequently detected by a magnetic resonance sensor integrated into the disk drive.

The development of fundamental design solutions intended for implementation within smart home infrastructure is continuing. The models and prototypes available to date have been tested and are capable of being integrated into new technological and engineering solutions.

Taking into account the specific characteristics and operating conditions of smart home infrastructure components, the author considers non-contact monitoring and identification systems based on the principles of electromagnetic resonance spectroscopy to be among the most practical, readily implementable, and promising areas for the further development of cybersecurity technologies in smart homes and at enterprises with complex production cycles.

In view of the results obtained from the preliminary qualification testing of this method, the author proposes the following findings and conclusions concerning its implementation in smart homes and functionally equivalent infrastructure systems:

Status of Projects Related to the Security Coding of Electronic Devices, Optical Discs, and Digital External Storage Media Used in Smart Home Infrastructure Systems and Subsystems

Within the established hierarchy of digital technologies and their various commercial applications, implementation is not limited to solutions designed specifically for smart homes. It also includes more universal applications suitable for such areas as **smart homes, smart buildings, smart cities, and smart cars**.

These examples do not represent all possible fields of implementation; however, their scope demonstrates the widespread adoption of these emerging technologies. For example, Samsung alone filed more than 1,600 patent applications relating to this field during the first quarter of 2021.

General Information

All projects within this group of technical solutions are based on a single method of coding and subsequently identifying the recorded parameters of a coding element.

The fundamental principle consists of applying a coded coating, or its technological equivalent, to the object being protected and subsequently measuring the thickness of that coating. The measurement result is then compared with a predetermined code to determine whether a match has been established.

If the measured value corresponds to the predetermined reference value, the coding element is positively identified. If the values do not match, the identification result is negative, causing the operating cycle of the relevant equipment or information-processing device, such as a computer, to be suspended or blocked.

Additional Technological Features

The technological requirements associated with applying specialized coatings have already been addressed, and the corresponding technology has been repeatedly tested in comparable applications involving the measurement and control of film thickness on solar panels and in conventional semiconductor manufacturing.

Additional Features and Potential Applications of the Technology in Response to Recent Developments in the Data Storage Market and the Rapid Growth of Products and Services for Smart Homes, Smart Buildings, Smart Cities, and Smart Cars

The emergence of new formats for recording and reading data on optical storage media using blue lasers, together with the introduction of multilayer optical discs based on the same technology, has further increased the significance of the proposed security-coding principles and technical solutions.

As the amount of information stored on each disc increases, the absence of effective protection may result in increasingly substantial losses of sensitive, proprietary, or confidential data.

In addition to the information previously provided, it is important to emphasize the possibility of coding each individual layer of a multilayer disc. Under this approach, every recording layer is assigned its own code. This constitutes a significant improvement in the three-dimensional formatting and security architecture of optical storage media.

For information of particular importance or secrecy, this approach also enables selective local coding of specific information areas within a single disc.

Organization of Corporate Security Systems Applicable to Smart Home Infrastructure and Functionally Equivalent Systems

When used to organize the protection of information flows within a corporation, the proposed technology provides several levels of system security. These include real-time monitoring of the operational status and physical location of every coded disc held by the corporation.

When the proposed coding methods are used to protect information stored on portable external storage media, they are expected to provide the same principal advantages as those achieved when the technology is applied to optical storage media and data storage devices.

Changes in the Structure and Scope of the Product Created Through Project Implementation

On the basis of comparable technical solutions, at least two independent projects may be developed, each with a broad range of potential applications:

1. A project involving technology for coding disc-based optical storage media, together with a corresponding analytical sensor system. The analytical sensor system may itself support numerous applications across a wide range of industries and technical fields.

2. A project involving the coding and protection of information stored on portable external storage media, together with a corresponding portable or stationary sensing, measurement, analysis, and comparison system. This system may also be implemented through numerous applications and design configurations.

Additional Devices and Systems That May Be Developed Using the Same Fundamental Technological Solutions

At the request of the project customer, the scope of either project may include the development of additional devices used to establish an integrated corporate system for securing and protecting information flows.

Such a system may be implemented within a single corporation, a group of corporations or, in the Russian context, state-owned corporations, as well as within individual research organizations, academic institutions, and major healthcare institutions.

A specialized product may also be developed to protect information not only during storage but also during operational transmission, including the transmission of commands and signals within military units and formations and in naval operations.

Under modern conditions, substantial quantities of information can be concentrated within storage devices of extremely small physical dimensions and capacity volumes. The potential damage resulting from unauthorized or criminal access to such information repositories may be prevented or contained through

the creation of a dedicated security infrastructure based on the systems described above.

This security infrastructure may be standardized according to the specific operational requirements of a particular ministry, central administrative authority, corporate structure, or enterprise operating at a lower organizational level.

Confidentiality of Information

More detailed information, including materials extending beyond the scope of the previously submitted presentation and its accompanying illustrations, may be provided once the intentions of a potential customer or business partner have been formally documented.

Such information may be disclosed after the parties have entered into an appropriate confidentiality or non-disclosure agreement in a mutually agreed legal form acceptable to both parties.

Comparative Characteristics of an Optical Disc Security Technology Based on the Dimensional Identification of Conductive Coding Layers Applied to Non-Data Areas of the Disc Surface and Maintained, While the Disc Is in Operation, in Continuous Non-Contact Inductive and Resonant Interaction with Sensors Integrated into the Disc Drive Servo System

Problems Existing in the Optical Data Storage Market and Potential Solutions Within Smart Home Infrastructure

1. Existing systems for protecting optical storage media are comparatively easy to compromise.

2. Existing security systems do not permit the rapid and effective identification of optical storage media according to their

ownership or authorized use. This may result either in the unauthorized removal of optical media from a corporate environment or in the unauthorized introduction of new, unregistered media into corporate information systems. Consequently, effective control over the security and integrity of corporate information becomes virtually impossible.

3. Existing corporate information storage and management systems cannot effectively prevent employees from using personal portable computers on corporate premises. They also cannot prevent corporate storage media from being removed and used outside the corporation or smart home. This may result in information leakage and significant losses.

4. The introduction of portable personal computers that do not contain hard disk drives and are designed to obtain the necessary software products from the Internet requires a specialized optical-disc coding system. The optical-disc code may also be used as a confidential personal access code for individual users.

Advantages of the Proposed Technology in Addressing the Identified Problems in the Optical Data Storage Market

1. The coding coatings may be produced in numerous thickness variations, providing a wide range of possible security codes. By comparison, established technologies generally provide only a single coding option.

2. The coating process uses a monitoring technology that is fully identical to the decoding technology. This makes it possible to perform complete quality control during disc manufacture without removing the disc from the production line.

Under established technologies, a disc must be removed from the production line and installed in a separate inspection device. Such inspection is therefore performed only on a sample basis.

The proposed technology enables 100% inspection, thereby preventing defective discs from entering circulation. Under existing technologies, such defects may not be detected until the discs are already in use.

3. The proposed technology enables the coding of all categories and types of discs, irrespective of their recording and reading formats. In existing technologies, the coding procedure depends on the particular recording and reading format of the disc.

4. The coding coating used in the proposed technology may serve as the basis for a confidential personal code or encryption key, a capability not provided by existing technologies.

5. The decoding and identification sensor used in the proposed technology is portable and may be supplied in several configurations, including as a standalone device that is not integrated into a disc drive.

Under existing technologies, decoding systems are installed exclusively within disc drives. The presence and validity of a code can therefore be verified only after the disc has been inserted into the drive. The proposed technology enables the code to be verified and identified independently of the disc drive, including at retail outlets or security checkpoints at enterprises and institutions. This capability is particularly important for maintaining a comprehensive information confidentiality regime.

6. In the proposed technology, the decoding process is entirely independent of the optical systems of the disc drive. Nevertheless, the decoding results may be used to modify the operation of those systems, including the servo drive responsible for positioning and controlling the focal point of the reading or recording laser.

In existing technologies, the decoding process is completely dependent on the optical components of the disc drive, making the drive more complex and substantially reducing its reliability.

7. The proposed technology supports several hierarchical configurations of its fundamental operating architecture. It has a flexible operating algorithm and may be integrated into any optical-memory security system, including systems using hybrid storage media that combine an optical component with storage elements based on other physical principles. Existing technologies do not provide this degree of flexibility.

8. The proposed technology enables the disc code to be used as an access password for entering specialized professional information repositories on the Internet. Existing technologies do not provide this capability.

Preliminary Definition of the Project's Core Product

Principal market segment: corporate customers and users operating within the supersystems and subsystems of smart homes, smart buildings, smart cities, and smart cars

1. Banks and financial institutions;
2. Industrial corporations;
3. Research laboratories;
4. Transportation companies, railway stations, airports, and seaports;
5. Major retail chains;
6. Municipal services;
7. Government organizations and institutions;
8. Major healthcare institutions;
9. Insurance companies;
10. Branches of the armed forces;
11. Police and security or intelligence agencies.

2. Preliminary Market Size Estimate

1. The average price of a disc drive with an integrated magnetic resonance sensor is USD 350.

2. The average price of a disc featuring a coding ring is USD 5.

3. The average number of disc drives required by one corporate customer within the market segment specified above is 1,750. The total cost of the disc drives for such a corporate customer is USD 612,500.

4. The average number of discs required by one corporate customer is 17,500, calculated on the basis of 10 discs per drive. The total cost of the discs for such a corporate customer is USD 87,500.

5. The estimated number of corporate customers within the specified market segment exceeds 10,000.

6. The estimated market volume for the specified corporate customers is at least USD 70,000,000 per year.

7. Across all categories of corporate customers, the estimated annual market volume may exceed USD 700,000,000 during the initial stage.

3. Product Characteristics

1. The project product consists of an optical disc featuring a coding ring and a disc drive equipped with an integrated sensor module, typically comprising three microsensors.

2. Where required, the sensor module may be supplied independently of the disc drive.

3. Where required, the company responsible for implementing the project may provide corporate customers with turnkey services for the deployment and commissioning of the information coding and security system.

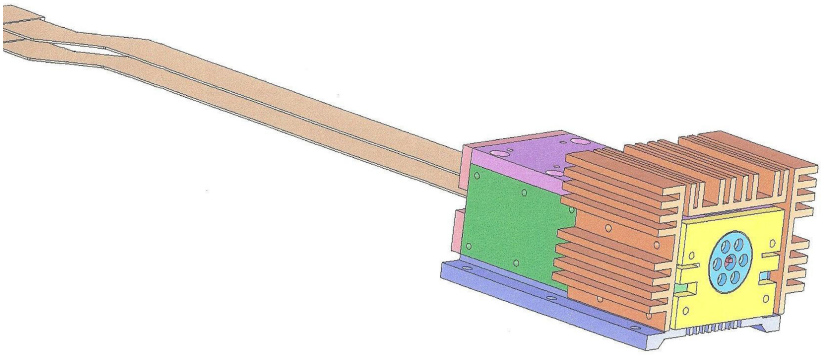

The figure presents a model of a smart home lighting system based on high-power laser diodes, designed to provide a high level of illumination while minimizing energy consumption.

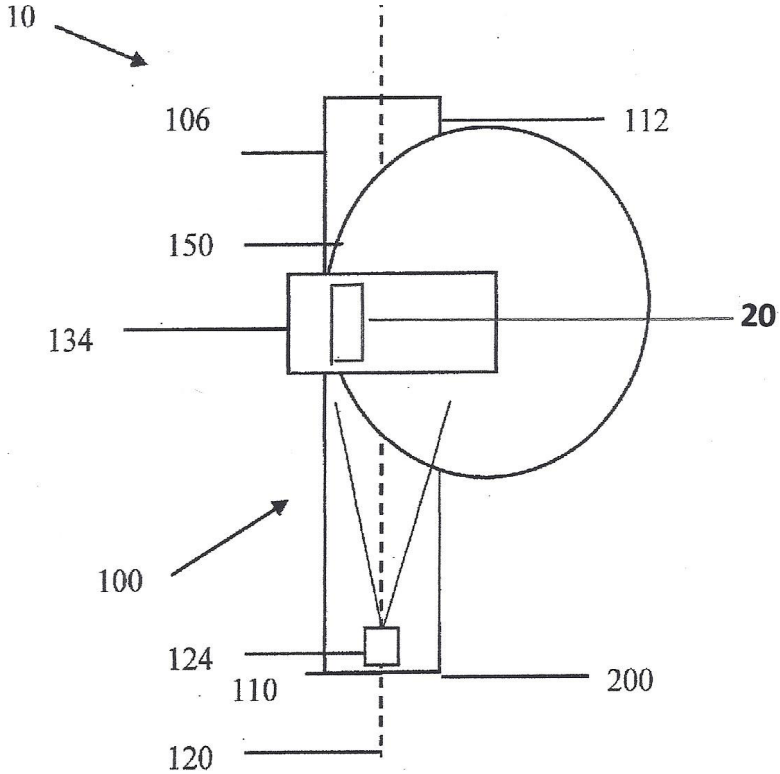

Brief Description of the Resonance Method

The method involves generating an alternating electromagnetic field within the space occupied by the sample under investigation. This field acts as an intermediary between the resonant circuit and the test sample.

On the one hand, the resonant circuit acts as the emitter of this field. On the other hand, it acts as a receiver, or sensing element, detecting the changes introduced into the electromagnetic field by the test sample.

Even in the absence of a test sample, the alternating electromagnetic field generated by the solenoid is the sum of two electromagnetic fields that vary in opposite phases.

One field is generated by changes in the magnetic flux density of the solenoid and produces a circulating electric field in accordance with the Maxwell–Faraday equation.

The other field is generated by changes in the electric field arising from the potential difference between the outermost turns of the solenoid when the sample is placed inside it. If the sample is positioned in front of the end face of the solenoid, this field arises from the potential difference between the solenoid turn closest to the surface of the sample and the sample itself. The changing electric field produces a circulating magnetic field in accordance with Ampère's circuital law with Maxwell's correction, also known as the Ampère–Maxwell law.

Depending on the nature of the test sample, exposure to the external alternating electromagnetic field may induce various electrical phenomena within it. These may include linear and circulating conduction currents, linear and circulating displace-

ment currents, and linear and circulating ionic currents resulting from the ordered motion of ions.

In accordance with the principle of superposition, these electrical phenomena introduce distortions into the external alternating electromagnetic field.

These distortions are detected by the solenoid of the resonance sensor. The resonant circuit containing this solenoid changes its behavior as though additional circuit elements – a capacitor, an inductor, and a resistor – had been incorporated into it.

The combined additional capacitive reactance, inductive reactance, and resistance constitute the additional impedance introduced into the system by the test sample. This is the parameter measured by the resonance sensor.

Changes in the parameters of the resonant circuit are reflected in its frequency response, particularly in changes in the circuit's resonant frequency and amplitude. By analyzing these changes, it is possible to determine the impedance characteristics of the test sample.

Principle of Processing Data Obtained from Resonance Sensors

A resonance sensor makes it possible to determine the total impedance of a test sample at the sensor's operating frequency, as described in the section entitled "Brief Description of the Resonance Method." Taken in isolation, this value provides relatively little information.

The situation changes fundamentally when an array of sensors operating at different frequencies is used.

Such an array makes it possible to utilize a unique natural phenomenon observed in all categories of matter, including inorganic, organic, and biological materials.

This phenomenon consists in the variation of a material's specific impedance as a function of the frequency of the electric field applied to it. The nature of this variation depends on the composition of the material under investigation.

This phenomenon is studied and actively utilized within the rapidly developing field of resonance spectroscopy. In English-language scientific literature, the relevant analytical method is commonly referred to as **Electrochemical Impedance Spectroscopy (EIS)**.

This type of spectroscopy – **impedance spectroscopy** – is a method for investigating various materials, objects, and processes by measuring and analyzing the frequency dependence of their impedance under alternating-current excitation.

Different objects and processes are characterized by different frequency-dependent relationships between the resistive and reactive components of impedance. This makes it possible to solve the inverse problem: information about the objects and processes under investigation can be obtained by analyzing the frequency characteristics of their response to an alternating electric field.

Because the variation in impedance with frequency depends on the composition of the material, it is possible to determine how each component affects the material's total impedance at different frequencies.

Once the weighting coefficients representing the influence of the relevant components on the total impedance of the material have been determined for each operating frequency of the

resonance sensors, the sensor readings can be used to obtain information about the concentrations of the components under investigation by solving a system of linear equations.

The accuracy of this method depends to a considerable extent on the correct selection of the sensors' operating frequencies.

A broad frequency range must therefore be scanned to identify the frequency regions most characteristic of each component – that is, the frequencies at which the component produces its strongest response.

Conventional impedance spectroscopy uses an alternating-voltage source that is brought into electrical contact with the test sample. An electric current then flows through the circuit, and both its magnitude and phase shift depend on the impedance of the sample.

The results are generally presented as Lissajous figures or Nyquist plots. Achieving high measurement sensitivity and accuracy with this type of investigation can be difficult.

The proposed method measures impedance using resonant circuits. It provides substantially greater sensitivity and accuracy while also enabling fully non-contact measurements.

Certain technical difficulties are associated with developing an oscillatory circuit whose resonant frequency can be tuned over a broad range. Consequently, conventional impedance spectroscopy must initially be used to identify the frequencies characteristic of the individual components.

Once these characteristic frequencies have been identified and resonance sensors designed for those frequencies have been developed, a component-monitoring system based on these sensors will provide exceptionally high sensitivity and measurement accuracy.

Interference Immunity

Mechanical parameters such as **viscosity, density, transparency, and pressure** – provided that the medium is incompressible – should have no effect on the measured electrical properties of the substance.

Flow velocity within the pipeline and turbulence involve processes that are too slow to affect impedance measurements performed in the megahertz frequency range.

Hardness is a chemical parameter determined entirely by the components present in the substance.

Temperature generally affects impedance values. However, measuring the temperature and compensating for its influence during impedance measurements does not constitute a complex technical task.

The drive unit configurations presented in the following models incorporate an oscillating feed mechanism that moves the relevant component into the operating zone of the laser diode, together with the associated stabilization and synchronization mechanisms. These models demonstrate the practical feasibility of such modernization for use in smart home systems, their functional equivalents, solar panels incorporated into smart home systems, and other energy equipment.

The following two models present a computer memory unit whose functional capabilities and processing capacity enable it to be integrated into smart home infrastructure, as well as into a future innovative quantum computer or an equivalent processing system.

To improve operating speed and responsiveness, the illustrated unit incorporates an oscillating arm carrying all the op-

tical, laser, electronic, and mechanical subsystems required to perform the designated functions. This configuration eliminates time losses associated with auxiliary movements of the actuating elements contained within the subsystems of the specified supersystem.

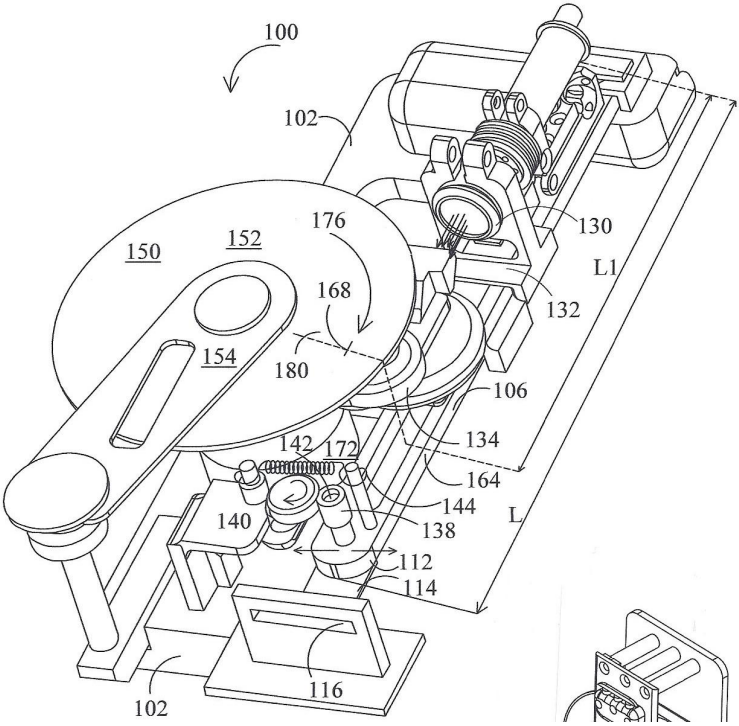

At the same time, the supersystem incorporates exceptionally simple connection subsystems. Its installation-related movements are limited in both duration and travel distance, thereby simplifying its integration into smart home systems.

These characteristics enable the supersystem to be widely used in smart home infrastructure and in various projects aimed at optimizing the technological equipment of industrial production systems across multiple sectors. Its application is par-

ticularly relevant to the monitoring and control systems of gas turbines and turbogenerators.

The author considers the potential application of non-contact monitoring and identification systems based on the principles of electromagnetic resonance spectroscopy within smart homes and functionally equivalent environments to be one of the most promising areas for the further development of cybersecurity technologies at enterprises with complex production cycles.

References, Patent and Licensing Information

1. Xu, Lixiang, et al. "Method and Apparatus for Data Transport Control Between Wireless Network Systems." United States Patent Application No. 20210105734, Kind Code A1, April 8, 2021.
2. Kim, Taehyoung, et al. "Method and Apparatus for Transmitting and Receiving Data Channels in Wireless Communication System." United States Patent Application No. 20210091880, Kind Code A1, March 25, 2021.
3. Jin, Seungri, et al. "Method and Apparatus for Supporting Simultaneous Transmission and Reception to Multiple Transmission and Reception Points in Next Generation Mobile Communication System." United States Patent Application No. 20210105780, Kind Code A1, April 8, 2021.
4. Agiwal, Anil, et al. "Method and Apparatus for Random Access Procedure." United States Patent Application No. 20210105828, Kind Code A1, April 8, 2021.
5. Jang, Jaehyuk, et al. "Method and Apparatus for Configuring Carrier Aggregation for Serving Cells Having Different Start Time Points in Frame in Wireless Communication System." United States Patent Application No. 20210105677, Kind Code A1, April 8, 2021.
6. Bennett, Andrew, et al. "Apparatus and Method for Network Configuration." United States Patent Application No. 20210105665, Kind Code A1, April 8, 2021.
7. Han, Yoonseon, et al. "Apparatus and Method for Mobility Management of Unmanned Aerial Vehicle Using Flight Mission and Route in Mobile Communication System."

United States Patent Application No. 20210101679, Kind Code A1, April 8, 2021.

8. Carroll, Brian, et al. "Smart Media Device." United States Patent Application No. 20210098137, Kind Code A1, April 1, 2021.
9. Park, Jonghan, et al. "Method and Apparatus for Reinstalling SIM Profile in Wireless Communication System." United States Patent Application No. 20210105609, Kind Code A1, April 8, 2021.
10. Agiwal, Anil, et al. "System and Method of Identifying Random Access Response." United States Patent Application No. 20210100042, Kind Code A1, April 1, 2021.
11. Yoon, Suha, et al. "Method and Apparatus for Transmitting Scheduling Request in Mobile Communication System." United States Patent Application No. 20210100010, Kind Code A1, April 1, 2021.
12. Agiwal, Anil, et al. "Method and Apparatus for Monitoring Wake Up Signal." United States Patent Application No. 20210099954, Kind Code A1, April 1, 2021.
13. Bang, Jonghyun, et al. "Method and Device for Transmitting/Receiving Uplink Control Information in Wireless Communication System." United States Patent Application No. 20210100024, Kind Code A1, April 1, 2021.
14. Shah, Sapan Pramodkumar, et al. "Method and System for Handling Mission Critical Data (MCData) Communications Using Pre-Established Session." United States Patent Application No. 20210099496, Kind Code A1, April 1, 2021.
15. Hosseinkhani Loorak, Mona, et al. "Hand-Over-Face Input Sensing for Interaction with a Device Having

a Built-In Camera." United States Patent Application No. 20210081658, Kind Code A1, March 18, 2021.

16. Myung, Seho, et al. "Method and Apparatus for Data Decoding in Communication or Broadcasting System." United States Patent Application No. 20210075442, Kind Code A1, March 11, 2021.
17. Kim, Soenghun, et al. "Method of Performing Cell Selection and Re-Selection Using PMAX Parameters and System Adapted Thereto." United States Patent Application No. 20210076317, Kind Code A1, March 11, 2021.
18. Jung, Euichang, et al. "Method and Apparatus for Transmitting or Receiving Multiple Pieces of Data in Wireless Cooperative Communication System." United States Patent Application No. 20210058113, Kind Code A1, February 25, 2021.
19. Yeo, Jeongho, et al. "Method and Apparatus for Decoding Downlink Control Signal in Wireless Cellular Communication System." United States Patent Application No. 20210068141, Kind Code A1, March 4, 2021.
20. Wang, Yi, et al. "Method and Apparatus for Transmitting Hybrid Automatic Repeat and Request Information in a Wireless Communication System." United States Patent Application No. 20210067276, Kind Code A1, March 4, 2021.
21. Kim, Soeng Hun, et al. "Method and Apparatus for Transmitting and Receiving Data Using Plurality of Carriers in Mobile Communication System." United States Patent Application No. 20210068168, Kind Code A1, March 4, 2021.
22. Wanke, Todd, et al. "Systems, Devices, and Methods Employing the Same for Enhancing Audience Engagement in a Competition or Performance." United States Patent Application No. 20210060404, Kind Code A1, March 4, 2021.

23. Baek, Youngkyo, et al. "Method and Apparatus for Terminating Cellular Network Connection of Unauthenticated Terminal." United States Patent Application No. 20210058848, Kind Code A1, February 25, 2021.
24. Kim, Donggun, et al. "Method and Device for Improved Communication Performance in Wireless Communication System." United States Patent Application No. 20210084534, Kind Code A1, March 18, 2021.
25. Ji, Hyoungju, et al. "Method and Apparatus for Indicating Beam Failure Recovery Operation of Terminal in Wireless Communication System." United States Patent Application No. 20210058805, Kind Code A1, February 25, 2021.
26. Lee, Wonbo, et al. "Method and Apparatus for Controlling Traffic of Network Device in Wireless Communication Network." United States Patent Application No. 20210099913, Kind Code A1, April 1, 2021.
27. Moon, Sangjun, et al. "Method and Apparatus for Performing Authorization for Unmanned Aerial System Service in Wireless Communication System." United States Patent Application No. 20210099870, Kind Code A1, April 1, 2021.
28. Park, Jungshin, et al. "Method for Supporting Efficient PDU Session Activation and Deactivation in Cellular Networks." United States Patent Application No. 20210076347, Kind Code A1, March 11, 2021.